Functional Description of Diagnosis

SGWM M150

ABS9

Protocol: KWP2000 On KLINE

© All rights reserved by ROBERT BOSCH GmbH, even in the event of patent claims.
This document must not be used in any way, such as copying and making available to third parties, without our consent.

1 History

All corrections of misspelling are excluded of the following list.

Ver.	Date	Editor	Chapter	Description of changes
02	May 11, 2012	Xu Minwei	All	Initial version based on CN100 RHD
03	June 12, 2012	Xu Minwei	3.9.4	Added NRC22

© All rights reserved by ROBERT BOSCH GmbH, even in the event of patent claims.
This document must not be used in any way, such as copying and making available to third parties, without our consent.

Table of contents

1 History 2
Table of contents 3
Table of contents 3
1.1 International and National Documents 6
1.2 Abbreviations 6
2 Serial Communication (Communication via K-Line) 6
2.1 Block Structure 6
2.1.1 Header 7
2.1.2 Data Bytes 8
2.1.3 Checksum 8
2.2 Data Formats 9
2.2.1 Block format 9
2.2.2 Message Structure 10
2.2.3 Byte format 11
2.3 Initializing Communication 12
2.3.1 Conditions for Initiating 12
2.3.2 Reaction of the ECU 12
2.3.3 Speed Limit 12
2.4 Maintaining Communication 13
2.5 Ending Communication 14
2.6 Communication Timings 15
2.6.1 Timing Overview 15
2.6.2 Timing Parameters 15
2.7 Securing Communication 16
2.8 Diagnostic Modes 17
2.8.1 Default (Normal) Mode 17
2.8.2 Vehicle Manufacturer Test Mode 17
3 Diagnostic Service List 18
3.1 Start Communication 18
3.1.1 Request 18
3.1.2 Positive response 18
3.1.3 Negative Response 18
3.2 StartDiagnosticSession 18
3.2.1 Purpose 18
3.2.2 Request 18
3.2.3 Positive Response 18
3.2.4 Negative Response 18
3.3 ECUReset 18
3.3.1 Purpose 18
3.3.2 Request 18
3.3.3 Positive Response 18
3.3.4 Negative Response 18
3.4 StopCommunication 18
3.4.1 Purpose 18
3.4.2 Request 18
3.4.3 Positive Response 18
3.4.4 Negative Response 18

© All rights reserved by ROBERT BOSCH GmbH, even in the event of patent claims.
This document must not be used in any way, such as copying and making available to third parties, without our consent.

3.5 ClearDiagnosticInformation 18
3.5.1 Purpose 18
3.5.2 Request 18
3.5.3 Positive Response 18
3.5.4 Negative Response 18
3.6 ReadStatusOfDTC 18
3.6.1 Purpose 18
3.6.2 Request 18
3.6.3 Positive Response 18
3.6.4 Negative Response 18
3.7 ReadDTCByStatus 18
3.7.1 Purpose 18
3.7.2 Request 18
3.7.3 Positive Response 18
3.7.4 Negative Response 18
3.8 ReadECUIdentification 18
3.8.1 Purpose 18
3.8.2 Request 18
3.8.3 Positive Response 18
3.8.4 Negative Response 18
3.9 ReadDataByLocalIdentifier 18
3.9.1 Purpose 18
3.9.2 Request 18
3.9.3 Positive Response 18
3.9.4 Negative Response 18
3.10 Security Access 18
3.10.1 Purpose 18
3.10.2 Request Step 1 18
3.10.3 Positive Response Step 1 18
3.10.4 Request Step 2 18
3.10.5 Positive Response Step 2 18
3.10.6 Negative Response 18
3.11 InputOutputControlByLocalIdentifier 18
3.11.1 Request 18
3.11.2 Positive Response 18
3.11.3 Negative Response 18
3.12 StartRoutineByLocalIdentifier 18
3.12.1 Purpose 18
3.12.2 Requests 18
3.12.3 Emergency Stop 18
3.12.4 RoutineLocalIdentifier = DelayedActuatorControl 18
3.12.5 RoutineLocalIdentifier = EvacAndFillControl 18
3.12.6 RoutineLocalIdentifier = RepairBleeding 18
3.12.7 Parameter descriptions for Actuator Test and Dynamic Test 18
3.12.8 RoutineLocalIdentifier = ActuatorTest 18
3.12.9 RoutineLocalIdentifier = DynamicTest 18
3.12.10 RoutineLocalIdentifier = Test of the wheel speed sensors 18
3.12.11 Positive Response 18
3.12.12 Negative Response 18
3.13 WriteDataByLocalIdentifier 18
3.13.1 Purpose 18

© All rights reserved by ROBERT BOSCH GmbH, even in the event of patent claims.
This document must not be used in any way, such as copying and making available to third parties, without our consent.

3.13.2 Request 18
3.13.3 Positive Response 18
3.13.4 Negative Response 18
3.14 TesterPresent 18
3.14.1 Purpose 18
3.14.2 Request 18
3.14.3 Positive Response 18
3.14.4 Negative Response 18
4 List of DTCs 18
4.1 DTC List 18
5 Diagnostic Flow Chart 18
6 Appendix – A: Actuator Table 18

© All rights reserved by ROBERT BOSCH GmbH, even in the event of patent claims.
This document must not be used in any way, such as copying and making available to third parties, without our consent.

1.1 International and National Documents

The general requirements of KLINE diagnosis communication protocol are based on the Keyword Protocol 2000 Design Standard requirements, specified in the following documents:

1. ISO 14230-2: Road Vehicles – Diagnostic Systems: KWP2000 – Data Link Layer
2. ISO 14230-3: Road Vehicles – Diagnostic Systems: KWP2000 – Part 3 Implementation

Remark:
Requirements in the above referenced documents may not be fully implemented. The document Functional Description of Diagnosis is the agreed specification for the implemented customer diagnosis.

1.2 Abbreviations

ABS	Antilock Braking Systems
AV	Outlet Valve
BLS	Brake Light Switch
DTC	Diagnostic Trouble Code
EBD	Electronic Brake force Distribution
ECU	Electronic Control Unit
EV	Inlet Valve
IGN	Ignition
STC	Start Communication
WUP	Wake Up Pattern

2 Serial Communication (Communication via K-Line)

The ECU communicates with the tester using a single wire (k-line) only. The exchange of data between the ECU and tester over the k-line is generally done in message/block handshake mode, after the establishment of a diagnosis session. The tester sends request blocks to the ECU, while the ECU acknowledges by response blocks.

2.1 Block Structure

The Request / Response Blocks consist of three parts – Header, Data bytes and Check Sum, as illustrated below:

Header				Data bytes		Checksum
Fmt	TA1)	SA1)	Len1)	SID2)	. . Data2) . .	CS
max. 4 byte				max. DBmax bytes3)		1 byte

© All rights reserved by ROBERT BOSCH GmbH, even in the event of patent claims.
This document must not be used in any way, such as copying and making available to third parties, without our consent.

1) Bytes are optional, depending on format byte
2) Service Identification, part of data bytes
3) Maximum number of Data Bytes is limited to DBmax for the ECU, due to resource limitation.

2.1.1 Header

The header part can have a maximum of 4 bytes depending on the initial Format Byte.

2.1.1.1 Format byte

The format byte (Fmt) contains 2-bit address mode information at bit 7 (A1) and bit 6 (A0), and 6-bit length information at bits 5 - 0. The ECU supports the following values for the 2-bit address mode:

A1	A0	Mode
0	0	No address information
1	0	With address information, physical addressing

Note: A1, A0 = '0, 1' for CARB mode and

A1, A0 = '1, 1' for Functional addressing mode are NOT supported

The 6-bit length information defines the length of a message from the beginning of the data field (Service Identification byte included) to checksum byte (not included). If these bits are set to zero, then an additional length byte is required.

2.1.1.2 Target address

The target address (TA) byte indicates the addressed node. In case of Request blocks, the Target address should have the Physical address of the ECU. The target address of the ECU Response blocks will be set with the same value as the Source Address of the Request Block.

2.1.1.3 Source address

The Source address (SA) byte indicates the address of the transmitting node. In case of Request blocks, the Source address should have the address of the Tester. In Response block from the ECU, this address will have the Physical address of the ECU.

2.1.1.4 Length byte

This additional length byte is provided if the 6-bit length field of the the Format byte is set to 0. This byte defines the length of a message from the beginning of the data field (service identification byte included) to checksum byte (not included). Though it is possible to use a data length of 1 to 255 bytes, the ECU can receive only a maximum data length of DBmax bytes. Thus the longest message can have a maximum of (DBmax +5) bytes only.

© All rights reserved by ROBERT BOSCH GmbH, even in the event of patent claims.
This document must not be used in any way, such as copying and making available to third parties, without our consent.

2.1.2 Data Bytes

The first byte of the data field is the Service Identification byte (SID). It can be followed with parameters and data depending on the selected service. The description of the data bytes for each service is given in the detailed service description part of this document. The ECU can receive only a maximum data length of DBmax bytes.

2.1.3 Checksum

The checksum byte (CS) inserted at the end of the message block is the simple 8-bit sum of all bytes in the message, excluding the checksum.

© All rights reserved by ROBERT BOSCH GmbH, even in the event of patent claims.
This document must not be used in any way, such as copying and making available to third parties, without our consent.

2.2 Data Formats

2.2.1 Block format

The ECU supports four types of message block formats based on the message Header part, as illustrated below,:

FORMAT 1 –**Header without address information, no additional length byte ***

Length			
Fmt	SID	Data	CS
Checksum			

FORMAT 2 –**Header with address information, no additional length byte**

Length					
Fmt	TA	SA	SID	Data	CS
Checksum					

FORMAT 3 –**Header without address information, additional length byte ***

Length				
Fmt	Len	SID	Data	CS
Checksum				

FORMAT 4 –**Header with address information, with additional length byte**

Length						
Fmt	TA	SA	Len	SID	Data	CS
Checksum						

Fmt	-Format Byte	Len	-Additional Length Byte
TA	-Target Address	SID	-Service Identifier
SA	-Source Address	CS	-Checksum

* These message formats, having no Address information, cannot be used with Start Communication service for the ECU.

© All rights reserved by ROBERT BOSCH GmbH, even in the event of patent claims.
This document must not be used in any way, such as copying and making available to third parties, without our consent.

2.2.2 Message Structure

The ECU supports the following message formats (**bolded text: See 2.2.1 FORMAT2&FORMAT4**).

Key bytes				Supported message format by the server (ECU)		
Binary: KB2	KB1	Hex	Dec.*)	Length information	Type of header	
1000 1111	1101 0000	$8FD0	2000	not supported by Recommended Practice VDA 14230-2		
1000 1111	1101 0101	$8FD5	2005	format byte	1 byte header	extended timing
1000 1111	1101 0110	$8FD6	2006	additional length byte		
1000 1111	0101 0111	$8F57	2007	both modes possible		
1000 1111	1101 1001	$8FD9	2009	format byte	header with target and source address information	
1000 1111	1101 1010	$8FDA	2010	additional length byte		
1000 1111	0101 1011	$8F5B	2011	both modes possible		
1000 1111	0101 1101	$8F5D	2013	format byte	both types of header supported	
1000 1111	0101 1110	$8F5E	2014	additional length byte		
1000 1111	1101 1111	$8FDF	2015	both modes possible		
1000 1111	1110 0101	$8FE5	2021	format byte	1 byte header	normal timing
1000 1111	1110 0110	$8FE6	2022	additional length byte		
1000 1111	0110 0111	$8F67	2023	both modes possible		
1000 1111	1110 1001	$8FE9	2025	format byte	**header with target and source address information**	
1000 1111	1110 1010	$8FEA	2026	additional length byte		
1000 1111	**0110 1011**	**$8F6B**	**2027**	**both modes possible**		
1000 1111	0110 1101	$8F6D	2029	format byte	both types of header supported	
1000 1111	0110 1110	$8F6E	2030	additional length byte		
1000 1111	1110 1111	$8FEF	2031	both modes possible		

© All rights reserved by ROBERT BOSCH GmbH, even in the event of patent claims.
This document must not be used in any way, such as copying and making available to third parties, without our consent.

2.2.3 Byte format

The following format applies to the individual bytes of a block during a diagnosis session:

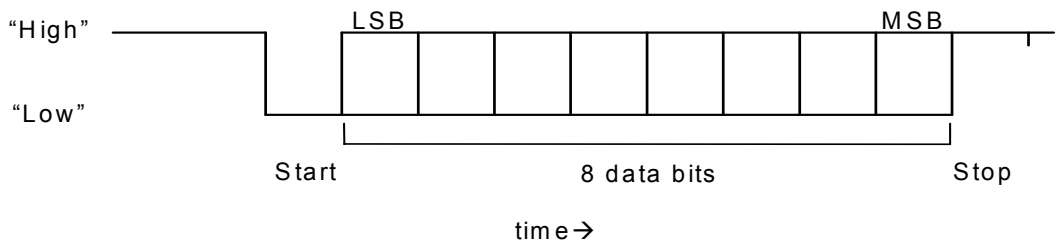

1 Start bit (Logic 0)
8 Data bits without parity (LSB first)
1 Stop bit (Logic 1)

© All rights reserved by ROBERT BOSCH GmbH, even in the event of patent claims.
This document must not be used in any way, such as copying and making available to third parties, without our consent.

2.3 Initializing Communication

The ECU supports only a Fast diagnosis initialization over the K-line.
For Fast Diagnosis initialization, the ECU waits for a "Wake-Up" pattern on the K-Line. On reception of a valid "Wake-Up" pattern, the ECU awaits a 'Start communication' request block from the Tester. When a valid a 'Start communication' request is also received, the ECU responds with a 'Start communication' response with two KeyByte values, for establishment of a Diagnostic Session. Please refer the section on Communication Timings below for Wake-Up pattern details and Key Byte values.

The 'Start communication' request block should be physically addressed to the ECU. If the ECU does not receive a valid 'Start communication' block within T_{WuP} time limit after the start of "Wake-Up" pattern, or if a transmission error is recognized, the diagnosis session will not be activated and no response will be send by the ECU to the 'Start Communication' request. The Tester can attempt to start a diagnostic session again by sending a new "Wake-Up" pattern followed by another 'Start Communication' request.

2.3.1 Conditions for Initiating

A valid "Wake Up Pattern" is detected by the ECU

- if the K-Line for $\mathbf{T_{idle}}$ was at logical ´1´before start of the trigger,
- if the K-Line was at logical `0` for a correct time $\mathbf{T_{iniL}}$,
- if the K-Line was at logical `1` for a correct time $\mathbf{T_{WuP}}$ - $\mathbf{T_{iniL}}$,
- If ECU initialisation is complete.

2.3.2 Reaction of the ECU

After initiating a diagnostic session the ECU switches on the warning lamps to show that the control function is not longer available.

2.3.3 Speed Limit

The ECU monitors a speed limit during the entire EOL diagnosis mode. Speed limit for the tester address is 10 Km/h.

© All rights reserved by ROBERT BOSCH GmbH, even in the event of patent claims.
This document must not be used in any way, such as copying and making available to third parties, without our consent.

2.4 Maintaining Communication

On successful establishment of a diagnosis session, Request blocks having no address information in the header part too can be sent to the ECU. The ECU expects the first Tester Request during **P3**. The inter-byte time of the tester should be within **P4** limits.

The Response of the ECU for any Request from the Tester will be started during **P2**. The inter-byte time of the ECU response will be within **P1** limits. Once a request is made, The Tester cannot cancel output of the response message from the ECU.

The tester can detect by an Idle Line (K line logical 1) with duration t > **P1max**, that the ECU has completed its Response and is ready to receive a new Request. If the Tester does not send the next Request within **P3max**, the ECU will stop communication exit the diagnosis session. 'Tester Present' service can be used to maintain the diagnosis session if the Tester requires more time than **P3max** to send the next functional service request.

The ECU may not send a response in case a transmission error of the Request block is recognized. If no response is coming from the ECU till end of **P2max**, the tester should try re-sending the request message. This re-sending of the message should be tried at least two times.

© All rights reserved by ROBERT BOSCH GmbH, even in the event of patent claims.
This document must not be used in any way, such as copying and making available to third parties, without our consent.

2.5 Ending Communication

Serial Communication will be ended under the following conditions, when:

- The speed limit is reached. Note that speed limit can be disabled by passing security access, ECU will unlock the speed limitation (See 3.10).
- A Stop Communication request is received (See 3.4)
- The ECU does not receive any tester message for more than 5 seconds (**$P3_{max}$** Timeout)
- Ignition is switched off

A diagnostic session is started using the StartCommunication/ StartDiagnosticSession service. When a diagnostic session is aborted, all diagnostic actuations (e.g. lamps, valves) will be switched off
Note that an ECU software reset is not equal to switching IGN off and on again. E.g. some failures can only be detected again after a new IGN cycle.

The above mechanism allows system protection in cases where the connection between diagnostic tool and ECU is broken.

© All rights reserved by ROBERT BOSCH GmbH, even in the event of patent claims.
This document must not be used in any way, such as copying and making available to third parties, without our consent.

2.6 Communication Timings

2.6.1 Timing Overview

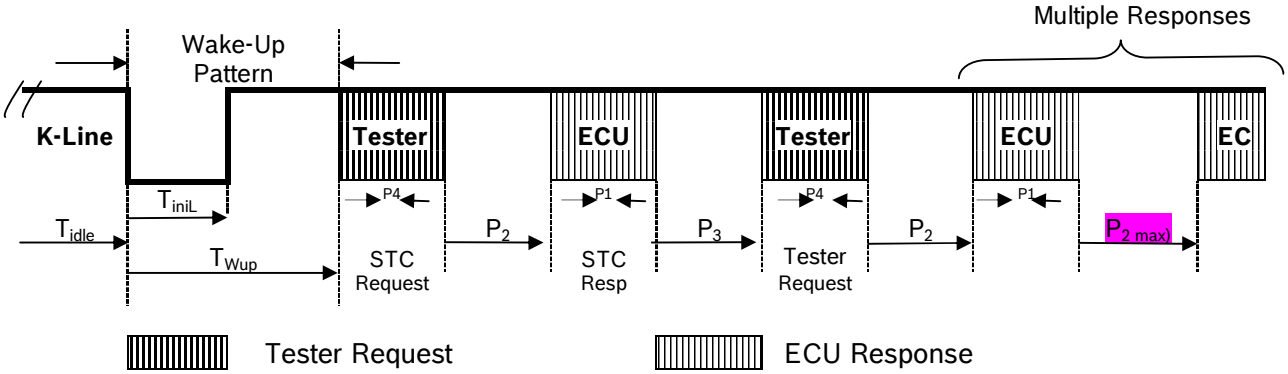

2.6.2 Timing Parameters

Parameter	Name	Value ABS
Communication speed (Baudrate)	BR	10400 Bd ±1.7%
Idle-Line before WUP (Wake up Pattern)	T_{idle}	≥ 300ms
ECU Address	$ADDR_{ECU}$	**0x28**
Tester Address	$ADDR_T$	**0xF1**
Value Keybyte 1	KB1	**6BH**
Value Keybyte 2	KB2	**8FH**
Time of WUP ground keying	T_{iniL}	24 ms .. 26 ms
Time between start of WUP and STC request	T_{WuP}	49 ms .. 51 ms
Inter-byte time for ECU response	P1	0,1 ms .. 20 ms
Inter-message time ECU	P2	25 ms .. 50 ms
Inter-message time tester	P3	55 ms .. 5 s
Inter-byte time tester	P4	0,1 ms .. 20 ms

© All rights reserved by ROBERT BOSCH GmbH, even in the event of patent claims.
This document must not be used in any way, such as copying and making available to third parties, without our consent.

2.7 Securing Communication

The following communication parameters are checked by the ECU throughout a diagnostic session:

- Format byte for non-plausible information
- Target Address byte in Tester Request
- Length byte for non-plausible information
- Checksum error
- Inter-byte timing of Tester request
- Byte Framing / Overrun errors

If the ECU detects an error during any of these checks, no Response will be sent to the tester. The ECU will then await a new Request from the tester.
The communication is stopped by the ECU, and the diagnosis session ended if the time $\mathbf{P3_{max}}$ is exceeded. The Tester will have to establish a new diagnosis session by sending a “Wake-Up” Pattern.

© All rights reserved by ROBERT BOSCH GmbH, even in the event of patent claims.
This document must not be used in any way, such as copying and making available to third parties, without our consent.

2.8 Diagnostic Modes

The ECU supports the following Diagnostic modes:

2.8.1 Default (Normal) Mode

This mode does not permit the execution of all diagnostic services possible for the ECU (see "Availability of Services" section below for services supported during this session).

2.8.2 Vehicle Manufacturer Test Mode

When the Fast Initialization over the K-line is successful, the ECU will be switched to Test mode, all the controller functions set to passive, and only the diagnostic services will be active. All lamps will be turned ON to indicate the non-availability of the controller. This mode allows the execution of all diagnostic services supported by the ECU for End-Of-Line testing at the manufacturing plant or for testing in the field.

During the Test mode, the ECU will monitor the time taken for every new tester request. The ECU will return to Default / Normal Diagnosis mode if this time exceeds **P3max** (see "Communication Parameters" section above).

© All rights reserved by ROBERT BOSCH GmbH, even in the event of patent claims.
This document must not be used in any way, such as copying and making available to third parties, without our consent.

3 Diagnostic Service List

ECU and Tester should support the diagnostic services listed below.

Diagnostic Service Name	Req. SID	LID	Def. Diag. Mode	ECU EOL Mode	
				With Security Locked	With Security Unlocked
StartDiagnosticSession	10h		◆	◆	◆
ECU Reset	11h		◆	◆	◆
ClearDiagnosticInformation	14h		◆	◆	◆
ReadStatusOfDTC	17h		◆	◆	◆
ReadDTCByStatus	18h		◆	◆	◆
ReadECUID	1Ah		◆	◆	◆
ReadDataByLocalID	21h				
Filling-in status of the Hydraulic block		02h	◆	◆	◆
Status of Test of End-Of-Line		03h	◆	◆	◆
Wheel speed FL		04h	◆	◆	◆
Wheel speed FR			◆	◆	◆
Wheel speed RL			◆	◆	◆
Wheel speed RR			◆	◆	◆
Vehicle speed		08h	◆	◆	◆
Valve status Valve Relay status, Pump motor status		09h	◆	◆	◆
BLS Status		10h	◆	◆	◆
Battery Voltage		1Ch	◆	◆	◆
Valve relay shut down + Speed limit Disable/Enable		1Fh	◆	◆	◆
SecurityAccess	27h			◆	◆
InputOutputControlByLocalIdentifier	30h			◆	◆
StartRoutineByLocalID	31h				
Delayed Actuator Control		01h		◆	◆
EvacAndFill		02h		◆	◆
RepairBleeding		03h		◆	◆
ActuatorTest		04h		◆	◆
DynamicTest		05h		◆	◆
Test of the wheel speed sensors		06h		◆	◆
WriteDataByLocalID	3Bh				
Filling Status of the Hydraulic block		02h			◆
Status of Test of End-Of-Line		03h			◆
TesterPresent	3Eh		◆	◆	◆
Start Communication	81h		◆	◆	◆
Stop Communication	82h		◆	◆	◆

Note: Sending request for unsupported services will return “7F XX 11” as negative response.

3.1 Start Communication

© All rights reserved by ROBERT BOSCH GmbH, even in the event of patent claims.
This document must not be used in any way, such as copying and making available to third parties, without our consent.

This tester request is allowed only once during communication set-up. StartCommunication must be executed before any other services. Serial Communication is ended in any conditions (See 2.5), StartCommunication must be executed again.

3.1.1 Request

TESTER → ECU: [SERVICE] - Request		
Byte	**Content**	**Value**
0	ServiceIdentifier	81H

3.1.2 Positive response

ECU → TESTER: [SERVICE] - Positive Response		
Byte	**Content**	**Value**
0	ServiceCode	C1H
1	Key byte 1	6BH
2	Key byte 2	8FH

3.1.3 Negative Response

ECU → TESTER: [SERVICE] - Negative Response		
Byte	**Contents**	**Value**
0	Negative Response Identifier	7Fh
1	Request Service Identifier	81h
2	**Response Code** Sub Function Not Supported / Invalid Length	12h

© All rights reserved by ROBERT BOSCH GmbH, even in the event of patent claims.
This document must not be used in any way, such as copying and making available to third parties, without our consent.

3.2 StartDiagnosticSession

3.2.1 Purpose

The service StartDiagnosticSession is used to select a specific ECU DiagnosticMode (called session). Depending on the session selected, actions are authorized, prohibited or limited. The following sessions are defined:

PARAMETER: DiagnosticMode		
Size (Byte)	**Description**	**Value**
1	StandardDiagnosticMode	81h
1	ECUEOLMode	83h

Remark: In the Default Session the ABS functionality is fully available.

Remark: In the EOL mode the ABS functionality is not available.

Remark: If vehicle speed more than 10kph, ECUEOLMode will not allowed to enter unless pass security access, ECU unlock speed limitation.

3.2.2 Request

TESTER → ECU: [SERVICE] - Request		
Byte	**Contents**	**Value**
0	Service Identifier	10h
1	DiagnosticMode	xxh

3.2.3 Positive Response

ECU → TESTER: [SERVICE] – Positive Response		
Byte	**Contents**	**Value**
0	Service Positive Response Identifier	50h
1	Diagnostic Mode	xxh

3.2.4 Negative Response

ECU → TESTER: [SERVICE] - Negative Response		
Byte	**Contents**	**Value**
0	Negative Response Identifier	7Fh
1	Request Service Identifier	10h
2	**Response Code** Sub Function Not Supported / Invalid Format ConditionsNotCorrect/RequestSeqError	 12h 22h

© All rights reserved by ROBERT BOSCH GmbH, even in the event of patent claims.
This document must not be used in any way, such as copying and making available to third parties, without our consent.

3.3 ECUReset

3.3.1 Purpose

The service ECUReset is used to restart the ECU.

PARAMETER: ResetMode		
Size (Byte)	Description	Value
1	SoftReset	03h

3.3.2 Request

TESTER → ECU: [SERVICE] - Request		
Byte	Contents	Value
0	Service Identifier	11h
1	ResetMode	03h

3.3.3 Positive Response

ECU → TESTER: [SERVICE] - Positive Response		
Byte	Contents	Value
0	Service Positive Response Identifier	51h
1	ResetMode	03h

3.3.4 Negative Response

ECU → TESTER: [SERVICE] - Negative Response		
Byte	Contents	Value
0	Negative Response Identifier	7Fh
1	Request Service Identifier	11h
2	**Response Code** SubFunctionNotSupported/InvalidFormat	12h

© All rights reserved by ROBERT BOSCH GmbH, even in the event of patent claims.
This document must not be used in any way, such as copying and making available to third parties, without our consent.

3.4 StopCommunication

3.4.1 Purpose

The service, "Stop communication", must be used to stop the current active communication between ECU and the diagnostic tool.

3.4.2 Request

TESTER → ECU: [SERVICE] - Request		
Byte	**Contents**	**Value**
0	Service Identifier	82h

3.4.3 Positive Response

ECU → TESTER: [SERVICE] – Positive Response		
Byte	**Contents**	**Value**
0	Service Positive Reponse Identifier	C2h

3.4.4 Negative Response

ECU → TESTER: [SERVICE] - Negative Response		
Byte	**Contents**	**Value**
0	Negative Response Identifier	7Fh
1	Request Service Identifier	82h
2	**Response Code** Sub Function Not Supported / Invalid Format	12h

© All rights reserved by ROBERT BOSCH GmbH, even in the event of patent claims.
This document must not be used in any way, such as copying and making available to third parties, without our consent.

3.5 ClearDiagnosticInformation

3.5.1 Purpose

The service ClearDiagnosticInformation is used to clear the fault memory. The parameter GroupOfDTC is used to indicate which ECU has to clear its fault memory.

3.5.2 Request

TESTER → ECU: [SERVICE] – Request		
Byte	**Contents**	**Value**
0	Service Identifier	14h
1	GroupOfDTC – High byte	FFh
2	GroupOfDTC – Middle byte	FFh
3	GroupOfDTC – Low byte	FFh

3.5.3 Positive Response

ECU → TESTER: [SERVICE] - Positive Response		
Byte	**Contents**	**Value**
0	Service Positive Response Identifier	54

3.5.4 Negative Response

ECU → TESTER: [SERVICE] - Negative Response		
Byte	**Contents**	**Value**
0	Negative Response Identifier	7Fh
1	Request Service Identifier	14h
2	**Response Code** SubFunctionNotSupported/InvalidFormat RequestCorrectlyReceived/ResponsePending	 12h 78h

Remark: If the erasing of the EEPROM needs more than $P2_{MAX}$, the ECU will send a negative response 78h (RequestCorrectlyReceived-ResponsePending) until it has been finished.

© All rights reserved by ROBERT BOSCH GmbH, even in the event of patent claims.
This document must not be used in any way, such as copying and making available to third parties, without our consent.

3.6 ReadStatusOfDTC

3.6.1 Purpose

The service ReadStatusOfDTC is used to read the status of a specific DTC from the failure memory.

Parameter : StatusOfDTC		
Size (Byte)	**Value**	**Description**
1	0x01 0x02 0x00	DTC Active DTC Inactive Invalid status

PARAMETER: NumberOfFaultDetections		
Size (Byte)	**Description**	**Value**
1	Everytime a special DTC is stored the NumberOfFaultDetections gets increased by one.	xxh

Remark: The fault path is indicated by the stored DTC. When store a new fault, a check is first conducted in order to establish whether the same DTC has already been saved at any point in the fault memory. If this is the case, the DTC is saved at the same position. Otherwise, it is saved at the next free position in the fault memory.

3.6.2 Request

TESTER → ECU: [SERVICE] – Request		
Byte	**Contents**	**Value**
0	Service Identifier	17h
1	DTC – High Byte	xxh
2	DTC – Middle Byte	xxh
3	DTC – Low Byte	xxh

3.6.3 Positive Response

ECU → TESTER: [SERVICE] - Positive Response		
Byte	**Contents**	**Value**
0	Service Positive Response Identifier	57h
1	NumberOfDTC	01h
2	DTC – High Byte	xxh
3	DTC – Middle Byte	xxh
4	DTC – Low Byte	xxh
5	StatusOfDTC	xxh
6	NumberOfFaultDetections	xxh
7	Vehicle Speed (1LSB = 1km/h, FFh = Invalid)	xxh
8	ECU power supply (1LSB = 80mV, FFh = Invalid)	xxh

© All rights reserved by ROBERT BOSCH GmbH, even in the event of patent claims.
This document must not be used in any way, such as copying and making available to third parties, without our consent.

3.6.4 Negative Response

ECU → TESTER: [SERVICE] - Negative Response		
Byte	**Contents**	**Value**
0	Negative Response Identifier	7Fh
1	Request Service Identifier	17h
2	**Response Code** Sub Function Not Supported / Invalid Format	12h

Remark: If there is no stored fault corresponding to the requested DTC, the ECU is sending a negative response with the parameter 12h.

© All rights reserved by ROBERT BOSCH GmbH, even in the event of patent claims.
This document must not be used in any way, such as copying and making available to third parties, without our consent.

3.7 ReadDTCByStatus

3.7.1 Purpose

The service ReadDTCByStatus is used to read all stored DTCs from the failure memory.

Parameter : StatusOfDTC		
Size (Byte)	**Value**	**Description**
1	0x01 0x02	DTC active DTC inactive

Remark: The entire fault memory of the ECU can accommodate up to 10 different errors simultaneously.

Remark: Old DTCs will be deleted after 100 ignition cycle. The Ignition cycle of the fault and current ignition cycle will be compared. If the difference is greater than or equal to 100, then the fault is removed from the EEPROM.

3.7.2 Request

TESTER → ECU: [SERVICE] – Request		
Byte	**Contents**	**Value**
0	Service Identifier	18h
1	StatusOfDTC 0x00: report all stored DTCs 0x01: report DTC with status active 0x02: report DTC with status inactive	XXh

3.7.3 Positive Response

ECU → TESTER: [SERVICE] - Positive Response		
Byte	**Contents**	**Value**
0	Service Positive Response Identifier	58h
1	NumberOfDTC	xxh
2…4	DTC	xxxxxxh
5	StatusOfDTC	xxh
…	DTC	xxxxxxh
…	StatusOfDTC	xxh

Remark: NumberOfDTC represent the DTC number of the same status as requested status.

Remark: If no DTC stored in ECU, NumberOfDTC will be 00h.

© All rights reserved by ROBERT BOSCH GmbH, even in the event of patent claims.
This document must not be used in any way, such as copying and making available to third parties, without our consent.

3.7.4 Negative Response

ECU → TESTER: [SERVICE] - Negative Response		
Byte	**Content**	**Value**
0	Negative Response Identifier	7Fh
1	Request Service Identifier	18h
2	**Response Code** Sub Function Not Supported / Invalid Format	12h

© All rights reserved by ROBERT BOSCH GmbH, even in the event of patent claims.
This document must not be used in any way, such as copying and making available to third parties, without our consent.

3.8 ReadECUIdentification

3.8.1 Purpose

The service ReadECUIdentification is used to read identification information from the ECU.
The parameter IdentificationOption is used to indicate which information has to be read.

PARAMETER: IdentificationOption		
Size (Byte)	**Description**	**Value**
1	ReportECUIdentificationTable	80h

3.8.2 Request

TESTER → ECU: [SERVICE] – Request		
Byte	**Contents**	**Value**
0	Service Identifier	1Ah
1	IdentificationOption	80h

3.8.3 Positive Response

ECU → TESTER: [SERVICE] - Positive Response		
Byte	**Contents**	**Value**
0	Service Positive Response Identifier	5Ah
1	Local Identifier	80h
2..6	Vehicle Name (ASCII, 5 bytes)	xxxxxxh
7..9	System Name (ASCII, 3 bytes)	xxxxxxh
10..12	BBNumber (BCD, 3 Bytes)	xxxxxxh
13..16	S/W Version (BCD, 4 bytes)	xxxxxxxxh
17..21	Supplier Specific Part Number (Hex, 5 bytes)	xx…xxh
22..34	Customer Specific Part Number (ASCII) 13 bytes	xx…xxh

Remark: Byte 17 .. 34 will be read from EEPROM.
Remark: Supplier Specific Part Number = 0x02, 0x65, 0x80, 0x51, 0x10.
Remark: Vehicle Name (ASCII, 5 bytes) = 0x4D ('M'), 0x31 ('1'), 0x35('5'), 0x30('0'). 0x20('space')
Remark: System Name (ASCII, 3 bytes) = 0x41('A'), 0x42('B'), 0x53('S').

© All rights reserved by ROBERT BOSCH GmbH, even in the event of patent claims.
This document must not be used in any way, such as copying and making available to third parties, without our consent.

3.8.4 Negative Response

ECU → TESTER: [SERVICE] - Negative Response		
Byte	**Content**	**Value**
0	Negative response Identifier	7Fh
1	Request Service Identifier	1Ah
2	**Response Code** SubFunctionNotSupported/InvalidFormat ConditionsNotCorrect ResponsePending	 12h 22h 78h

Remark: If the reading of the EEPROM needs more than $P2_{Max}$, the ECU will send a negative response 78h (RequestCorrectlyReceived-ResponsePending) until it has finished.

© All rights reserved by ROBERT BOSCH GmbH, even in the event of patent claims.
This document must not be used in any way, such as copying and making available to third parties, without our consent.

3.9 ReadDataByLocalIdentifier

3.9.1 Purpose

This service allows the tester to request current data from the ECU using specific data IDs.

PARAMETER: RecordLocalidentifier				
Request Byte (Size)	**Description**		**Response Databyte (Size)**	**Value (Record LocalIdentifier)**
1	Filling-in status of the hydraulic block Filling-in status		1	02h
1	Test of End-Of-Line End of Line Test status		1	03h
1	Byte 0-1	Wheel Speed FL Range 0...296km/h 1 LSB = 0.0563km/h Invalid value : 0xffff	2	04h
	Byte 2-3	Wheel Speed FR Range 0...296km/h 1LSB = 0.0563 km/h Invalid value : 0xffff	2	
	Byte 4-5	Wheel Speed RL Range 0...296km/h 1LSB = 0.0563 km/h Invalid value : 0xffff	2	
	Byte 6-7	Wheel Speed RR Range 0...296km/h 1LSB = 0.0563 km/h Invalid value : 0xffff	2	
1	Vehicle Speed Range 0...296km/h 1LSB = 0.0563 km/h 0xffff : Invalid speed.		2	08h
1	Valve Status Byte 1: Bit 0: EVFL - Inlet valve front left - 1h ON / 0h OFF Bit 1: AVFL - Outlet valve front left - 1h ON / 0h OFF Bit 2: EVFR - Inlet valve front right - 1h ON / 0h OFF Bit 3: AVFR - Outlet valve front right - 1h ON / 0h OFF Bit 4: EVRL - Inlet valve rear left - 1h ON / 0h OFF Bit 5: AVRL - Outlet valve rear left - 1h ON / 0h OFF Bit 6: EVRR - Inlet valve rear right - 1h ON / 0h OFF Bit 7: AVRR - Outlet valve rear right - 1h ON / 0h OFF Byte 2: Bit 0: Valve Relay Status - 1h ON / 0h OFF Bit 1: Pump Status - 1h ON / 0h OFF Bit 2: 0x00 (Reserved) Bit 3: 0x00 (Reserved) Bit 4: 0x00 (Reserved) Bit 5: 0x00 (Reserved) Bit 6: 0x00 (Reserved) Bit 7: 0x00 (Reserved)		2	09h

© All rights reserved by ROBERT BOSCH GmbH, even in the event of patent claims.
This document must not be used in any way, such as copying and making available to third parties, without our consent.

PARAMETER: RecordLocalidentifier			
Request Byte (Size)	**Description**	**Response Databyte (Size)**	**Value (Record LocalIdentifier)**
1	BLS Status FFh ON / 00h OFF	1	10h
1	Battery Voltage Range 8...19.89V 1LSB = 0.080 V/bit	1	1Ch
1	Valve relay shut down disable/enable status + Speed limit disable/enable status Bit 0 : Current Valve relay shutdown disable or Enable status Bit0 == 1: Valve relay shutdown Disable Bit0 ==0: Valve relay shutdown Enable Bit 1: Current Speed limit disable/enable status Bit1 == 1: Speed Limit Disable Bit1 == 0: Speed Limit Enable Bit2 ~ Bit 7 reserved as 0x00.	1	1Fh

Remark: If a valve relay is down then the Valve status (PID 09h) value is not valid.

3.9.2 Request

TESTER → ECU: [SERVICE] – Request		
Byte	**Contents**	**Value**
0	Service Identifier	21h
1	RecordLocalIdentifier	xxh

3.9.3 Positive Response

ECU → TESTER: [SERVICE] – Positive Response		
Byte	**Contents**	**Value**
0	Service Positive Response Identifier	61h
1	RecordLocalIdentifier	xxh
2	Data record #1 Byte 1 (MSB)	xxh
…	…	…
2 + r	Data record #1 Byte r (LSB)	xxh

© All rights reserved by ROBERT BOSCH GmbH, even in the event of patent claims.
This document must not be used in any way, such as copying and making available to third parties, without our consent.

3.9.4 Negative Response

ECU → TESTER: [SERVICE] - Negative Response		
Byte	**Content**	**Value**
0	Negative Response Identifier	7Fh
1	Request Service Identifier	21h
2	**Response Code** Sub Function Not Supported / Invalid Format ConditionsNotCorrect Response Pending	 12h 22h 78h

3.10 Security Access

3.10.1 Purpose

The service SecurityAccess is used to get access to secured services by changing to different level of security. Changing the level of security is a two step procedure:

1. Tester requests seed, ECU sends seed
2. Tester sends the key, ECU sends a positive response (meaning the key was valid) and changes to the new security level

Remark: After two false attempts to change the security level the ECU is locked for 10 seconds.
Remark: After Security Access successfully, **ECU unlock vehicle speed limitation, ECUEOLMode can run at condition vehicle speed more than 10kph.**

PARAMETER: AccessModeRequestSeed		
Size (Byte)	**Description**	**Value**
1	Request Seed for General Security Level 1	01h

PARAMETER: AccessModeSendKey		
Size (Byte)	**Description**	**Value**
1	Send Key for General Security Level 1	02h

PARAMETER: SecurityAccessStatus		
Size (Byte)	**Description**	**Value**
1	SecurityAccessAllowed	34h

3.10.2 Request Step 1

TESTER → ECU: [SERVICE] - Request		
Byte	**Contents**	**Value**
0	Service Identifier	27h
1	AccessModeRequestSeed	01h

© All rights reserved by ROBERT BOSCH GmbH, even in the event of patent claims.
This document must not be used in any way, such as copying and making available to third parties, without our consent.

3.10.3 Positive Response Step 1

ECU → TESTER: [SERVICE] - Positive Response		
Byte	**Contents**	**Value**
0	Service Positive Response Identifier	67h
1	AccessModeRequestSeed	01h
2	Seed Byte 1 – High Byte	xxh
3	Seed Byte 2	xxh
4	Seed Byte 3	xxh
5	Seed Byte 4 – Low Byte	xxh

3.10.4 Request Step 2

TESTER → ECU: [SERVICE] - Request		
Byte	**Contents**	**Value**
0	Service Identifier	27h
1	AccessModeSendKey	02h
2	Key Byte 1 – High Byte	xxh
3	Key Byte 2	xxh
4	Key Byte 3	xxh
5	Key Byte 4 – Low Byte	xxh

3.10.5 Positive Response Step 2

ECU → TESTER: [SERVICE] - Positive Response		
Byte	**Contents**	**Value**
0	Service Positive Response Identifier	67h
1	AccessModeSendKey	02h
2	SecurityAccessStatus	34h

3.10.6 Negative Response

ECU → TESTER: [SERVICE] - Negative Response		
Byte	**Content**	**Value**
0	Negative Response Identifier	7Fh
1	Request Service Identifier	27h
2	**Response Code** Sub Function Not Supported / Invalid Format Conditions Not Correct / Request Sequence Error Wrong key	 12h 22h 35h

© All rights reserved by ROBERT BOSCH GmbH, even in the event of patent claims.
This document must not be used in any way, such as copying and making available to third parties, without our consent.

© All rights reserved by ROBERT BOSCH GmbH, even in the event of patent claims.
This document must not be used in any way, such as copying and making available to third parties, without our consent.

3.11 InputOutputControlByLocalIdentifier

This request is used to actuate a single control. The parameter ControlOption is used to indicate whether the control has to be temporary, permanent or whether it has to be stopped. When using ControlOption "Start temporary control" the control runs for 2s. When using ControlOption "Start permanent control" the control runs until it is stopped by sending the same request with ControlOption set to "Stop control".

Supported LIDs for Single Output Control (InputOutputLocalIdentifier)

PARAMETER: InputOutputControlByLocalIdentifier				
Size (Byte)	**Description**	**Value**	**Temp.**	**Perm.**
1	Single control - Motor (Pump)	01h	Yes	No
1	Single control - Front left valve (inlet)	02h	Yes	No
1	Single control - Front right valve (inlet)	03h	Yes	No
1	Single control - Rear left valve (inlet)	04h	Yes	No
1	Single control - Rear right valve (inlet)	05h	Yes	No
1	Single control - Front left valve (outlet)	06h	Yes	No
1	Single control - Front right valve (outlet)	07h	Yes	No
1	Single control - Rear left valve (outlet)	08h	Yes	No
1	Single control - Rear right valve (outlet)	09h	Yes	No
1	Single control - Disable valve relay shutdown	1Fh	No	Yes

3.11.1 Request

TESTER → ECU: [SERVICE] - Request		
Byte	**Contents**	**Value**
0	ServiceIdentifier	30h
1	InputOutputLocalIdentifier	xxh
2	**InputOutputControlParameter** Start temporary control 01h Stop control 02h (Only for InputOutputLocalIdentifier 1Fh) Start permanent control 03h	xxh

Two ways of control can be distinguished:

Temporary: The actuator will be switched on for 2 s.
Permanent: The actuator will be switched on. It can be switched off (stopped) by sending a "Emergency Stop Request" (command 02H).

© All rights reserved by ROBERT BOSCH GmbH, even in the event of patent claims.
This document must not be used in any way, such as copying and making available to third parties, without our consent.

3.11.2 Positive Response

ECU → TESTER: [SERVICE] - Positive Response		
Byte	**Contents**	**Value**
0	Service Positive Response Identifier	70h
1	InputOutputLocalIdentifier	xxh
2	**Status** Started 01h Control completed 02h Control In Progress 03h Stopped 04h Failure Or Not Started 05h	xxh

Remarks

- **LIDs $1F should be used with care**, these LIDs will disable parts of the safety software. Therefore, the ECU may be damaged or the vehicle may not be safe to drive (e.g. if the speed limit during diagnostics is disabled and then the valves are activated while driving the car).

If the valves are activated for long time, A valve overheat protection functionality is implemented. When Valves are actuated for more than a specified time then actuation will be disabled .When Valves cool down actuation will be activated again. This is done through up count and down count mechanism. Overheat protection for valves avoid failures in the field.

3.11.3 Negative Response

ECU → TESTER: [SERVICE] - Negative Response		
Byte	**Contents**	**Value**
0	Negative Response Identifier	7Fh
1	Request Service Identifier	30h
2	**Response Code** Sub Function Not Supported / Invalid Format Conditions Not Correct / Request Sequence Error	 12h 22h

© All rights reserved by ROBERT BOSCH GmbH, even in the event of patent claims.
This document must not be used in any way, such as copying and making available to third parties, without our consent.

3.12 StartRoutineByLocalIdentifier

3.12.1 Purpose

The service StartRoutineByLocalIdentifier is used to control actuators connected to the ECU. Depending on the parameter StartRoutineLocalIdentifier a specific function is started (01h to 06h). The following values for the parameter RoutineLocalIdentifier are defined:

Parameter : RoutineLocalIdentifier		
Size (Byte)	**Description**	**Value**
1	DelayedActuatorControl	01h
1	EvacAndFill	02h
1	RepairBleeding	03h
1	ActuatorTest	04h
1	DynamicTest	05h
1	Test of the wheel speed sensors	06h

PARAMETER: ControlOption		
Size (Byte)	**Description**	**Value**
1	Start Routine	01h
1	Stop Routine	02h
1	Request routine results	03h

3.12.2 Requests

Remark: If the valves are activated for too long the ECU can be damaged. The maximum activation time of the valves must not exceed 30 seconds at an ambient temperature of 30°C. Note that Bosch has changed the overheat protection strategy for system 9 (outlet valves no longer toggling after 1s). Using this service repeatedly can damage the valves or pump. Please keep this information in mind when using this service.

Remark: If the ControlOption is set to “Stop control” the request must only have 3 bytes: Service Identifier, StartRoutineLocalIdentifier, ControlOption.

© All rights reserved by ROBERT BOSCH GmbH, even in the event of patent claims.
This document must not be used in any way, such as copying and making available to third parties, without our consent.

3.12.3 Emergency Stop

At any time it is possible to interrupt the control of the output which is being tested.

TESTER → ECU: [SERVICE] – Request		
Byte	**Contents**	**Value**
0	Service Identifier	31h
1	StartRoutineLocalIdentifier	xxh
2	ControlOption = Stop Control	02h

3.12.4 RoutineLocalIdentifier = DelayedActuatorControl

This request is used to control multiple drivers simultaneously. For each control two states are defined: state 1 and state 2. When the request was received the selected controls are set in state 1. After the activation time they are set to state 2.

In comparison to the Actuator Test this service allows the tester to actuate one or more valves for a specified time. This feature allows the tester to run the customer specified End Of Line routine sequence instead of Pre-defined Periodic Actuator Control sequence.

PARAMETER: ValveStates	
Position (Bit)	**Description**
0	Inlet front left
1	Outlet front left
2	Inlet front right
3	Outlet front right
4	Inlet rear left
5	Outlet rear left
6	Inlet rear right
7	Outlet rear right

PARAMETER: DriverStates	
Position (Bit)	**Description**
0	Unused
1	Unused
2	Unused
3	Unused
4	Unused
5	Unused
6	Pump
7	Unused

Remark: For each control the corresponding bit has to be set to 1 to switch the actuator on and to 0 to switch the actuator off.

© All rights reserved by ROBERT BOSCH GmbH, even in the event of patent claims.
This document must not be used in any way, such as copying and making available to third parties, without our consent.

TESTER → ECU: [SERVICE] – Request		
Byte	**Contents**	**Value**
0	Service Identifier	31h
1	RoutineLocalIdentifier	01h
2	ControlOption	01h
3	ValveStates (State 1)	xxh
4	DriverStates (State 1)	xxh
5	Activation time (1LSB = 20ms)	xxh
6	ValveStates (State 2)	xxh
7	DriverStates (State 2)	xxh

Remark: A "Failure" response has one of the following reasons: At least one valve or one driver doesn't exist or the control is not possible at this time because of safety reasons.

Remark: A control that has been started by a delay actuator control request can be stopped by a request with the ControlOption set to "Stop control" (Emergency Stop, 31h 01h 02h).

Remark: At each end of this service the tester has to send the following request to turn off all controls: 31h 01h 01h 00h 00h 00h 00h 00h.

3.12.5 RoutineLocalIdentifier = EvacAndFillControl

This request is used to fill and drain the hydraulic unit.

TESTER → ECU: [SERVICE] – Request		
Byte	**Contents**	**Value**
0	Service Identifier	31h
1	RoutineLocalIdentifier	02h
2	ControlOption	01h
3	Evac and fill time resolution: 1s/bit	xxh
4	Time until start of pump motor resolution: 1s/bit	xxh

Remark: Time has to be between 2 s and 150 s. If Time exceeds this limit, the ECU uses the maximum allowed value. After evac and filling time, the pump will run for 2 additional seconds, if the delay time in byte4 is not FF.

Remark: 'Time until start of pump motor ' Normally less than or equal to 'Evac and fill time'.

3.12.6 RoutineLocalIdentifier = RepairBleeding

This request is used to fill and drain the hydraulic unit.

TESTER → ECU: [SERVICE] – Request			
Byte	**Contents**	**Value**	**Comment**
0	Service Identifier	31h	
1	RoutineLocalIdentifier	03h	
2	ControlOption	01h	
3	Repair bleeding phase (1..4)	xxh	

© All rights reserved by ROBERT BOSCH GmbH, even in the event of patent claims.
This document must not be used in any way, such as copying and making available to third parties, without our consent.

TESTER → ECU: [SERVICE] – Request			
Byte	**Contents**	**Value**	**Comment**
4	Repetition counter(3..5)	xxh	No. of loops: 3..5

Remark: Repair Bleeding is splitted in 4 different phases. phase 3 and 4 have a loop counter, Phase1 ,2 are no loop counter required, loop counter for Phase 1,2 could be any value.

Remark: Repair Bleeding is split in 4 different phases. In phase 3 and 4 there is a loop counter, it is possible to run between 3 and a maximum of 5 loops. Bosch recommends a number of 4 loops for a good bleeding result.

3.12.7 Parameter descriptions for Actuator Test and Dynamic Test

Following parameter descriptions are valid for the ActuatorTest and for the Dynamic Test

PARAMETER: ResultSelection		
Size (Byte)	**Description**	**Value**
1	Without result	00h
1	With result	FFh

PARAMETER: ActuationValue		
Size (Byte)	**Description**	**Value**
2	This parameter specifies the amount of actuation. Resolution: 1 bit = 1%	xxxxh

PARAMETER: ActuatorNumber		
Size (Byte)	**Description**	**Value**
2	No actuation*	0000h
2	Inlet valve front left	0030h
2	Outlet valve front left	0032h
2	Inlet valve front right	0034h
2	Outlet valve front right	0036h
2	Inlet valve rear right	0038h
2	Outlet valve rear right	003Ah
2	Inlet valve rear left	003Ch
2	Outlet valve rear left	003Eh
2	Pump motor relay	0022h

Remark: * Use if less than four actuators are to be actuated by an actuator test or dynamic test request.

PARAMETER: ActuationTime		
Size (Byte)	**Description**	**Value**
2	This parameter specifies the time between the first and the second actuation. Resolution: 1 bit = 10 ms	Xxxxh

PARAMETER: WaitTime		
Size (Byte)	**Description**	**Value**
2	This parameter specifies the waiting time. Resolution: 1 bit = 10 ms	Xxxxh

© All rights reserved by ROBERT BOSCH GmbH, even in the event of patent claims.
This document must not be used in any way, such as copying and making available to third parties, without our consent.

3.12.8 RoutineLocalIdentifier = ActuatorTest

This request is used to start the ActuatorTest.

TESTER → ECU: [SERVICE] – Request		
Byte	**Contents**	**Value**
0	Service Identifier	31h
1	RoutineLocalIdentifier	04h
2	ControlOption	01h
3	ResultSelection	Xxh
4..5	ActuationValue 1	Xxxxh
6..7	ActuatorNumber 1	Xxxxh
8..9	ActuationValue 2	Xxxxh
10..11	ActuatorNumber 2	Xxxxh
12..13	ActuationTime (1LSB = 10ms)	Xxxxh
14..15	ActuationValue 3	Xxxxh
16..17	ActuationNumber 3	Xxxxh
18..19	ActuationValue 4	Xxxxh
20..21	ActuatorNumber 4	Xxxxh

Remark: The pump motor relay must not be actuated for times shorter than 20ms. Shorter actuations could damage the motor relay due to very high current during the starting phase of the motor.

Remark: Bosch strongly recommends only using an ActuationValue of 0% and 100%.

Remark: A negative response has one of the following reasons: At least one valve or one driver doesn't exist or the control is not possible at this time because of safety reasons.

Remark: If the valve relay is out of order, the routine will be aborted.

Example:

- Start actuator test **without result** selection

Request	Response	Comment
31 04 01 **00** Xx Xx ...	71 04 01	-> Start actuation, Routine started by the tester
31 04 03	71 04 03	-> Status interrogation, control still in progress
.	.	
.	.	
31 04 03	71 04 02	-> Status interrogation, control complete, no result bytes sent

- Start actuator test **with result** selection

Request	Response	Comment
31 04 01 **FF** Xx Xx ...	71 04 01	-> Start actuation, routine started by the tester
31 04 03	71 04 03	-> Status interrogation, control still in progress
.	.	
31 04 03	71 04 02 Xx Xx ...	-> Status interrogation, control complete, result bytes sent

© All rights reserved by ROBERT BOSCH GmbH, even in the event of patent claims.
This document must not be used in any way, such as copying and making available to third parties, without our consent.

3.12.9 RoutineLocalIdentifier = DynamicTest

This request is used to start the Dynamic Test.

TESTER → ECU: [SERVICE] – Request		
Byte	**Contents**	**Value**
0	Service Identifier	31h
1	RoutineLocalIdentifier	05h
2	ControlOption	01h
3..4	ActuationValue 1	Xxxxh
5..6	ActuatorNumber 1	Xxxxh
7..8	ActuationValue 2	Xxxxh
9..10	ActuatorNumber 2	Xxxxh
11..12	ActuationTime (1LSB = 10ms)	Xxxxh
13..14	ActuationValue 3	Xxxxh
15..16	ActuationNumber 3	Xxxxh
17..18	ActuationValue 4	Xxxxh
19..20	ActuatorNumber 4	Xxxxh
21..22	WaitTime (1LSB = 10ms)	Xxxxh

3.12.10 RoutineLocalIdentifier = Test of the wheel speed sensors

This request is used to start the wheel speed sensor test.

TESTER → ECU: [SERVICE] – Request		
Byte	**Contents**	**Value**
0	Service Identifier	31h
1	RoutineLocalIdentifier	06h
2	ControlOption	01h
3	Duration (1LSB = 100ms)	xxh

Remark : Duration time should not set to 0s.

3.12.10.1 RequestRoutineResult

The Request Routine Results by Local Identifier gets the optional results of routines previously activated with the Start Routine.

TESTER → ECU: [SERVICE] – Request		
Byte	**Contents**	**Value**
0	Service Identifier	31h
1	RoutineLocalIdentifier	xxh
2	ControlOption = Routine result	03h

© All rights reserved by ROBERT BOSCH GmbH, even in the event of patent claims.
This document must not be used in any way, such as copying and making available to third parties, without our consent.

3.12.11 Positive Response

PARAMETER: Control/RoutineStatus		
Size (Byte)	**Description**	**Value**
1	Control/Routine Started successfully by the tester	01h
1	Control/Routine completed	02h
1	Control/Routine in progress	03h
1	Control/Routine stopped	04h
1	Control/Routine failure or Routine not run	05h

3.12.11.1 Control Option = Start Routine and Stop Routine

For requests with Control option Start Routine (01h) and Stop Routine (02h), the positive response is returned in the following format.

ECU → TESTER: [SERVICE] - Positive Response		
Byte	**Contents**	**Value**
0	Service Positive Response Identifier	71h
1	RoutineLocalIdentifier	xxh
2	ControlStatus (01h or 04h)	xxh

3.12.11.2 RoutineLocalIdentifier = Delayed Actuator, EvacAndFill and Repair Bleed control

ECU → TESTER: [SERVICE] - Positive Response		
Byte	**Contents**	**Value**
0	Service Positive Response Identifier	71h
1	RoutineLocalIdentifier (01h 02h and 03h)	Xxh
2	ControlStatus	Xxh

3.12.11.3 RoutineLocalIdentifier = Actuator Test, response without result

ECU → TESTER: [SERVICE] - Positive Response		
Byte	**Contents**	**Value**
0	Service Positive Response Identifier	71h
1	RoutineLocalIdentifier	04h
2	ControlStatus	Xxh

3.12.11.4 RoutineLocalIdentifier = Actuator Test, response with result

ECU → TESTER: [SERVICE] - Positive Response		
Byte	**Contents**	**Value**
0	Service Positive Response Identifier	71h
1	RoutineLocalIdentifier	04h
2	ControlStatus	Xxh

© All rights reserved by ROBERT BOSCH GmbH, even in the event of patent claims.
This document must not be used in any way, such as copying and making available to third parties, without our consent.

3..4	Result, actuator 1	Xxxxh
5..6	Result, actuator 2	Xxxxh
7..8	Result, actuator 3	Xxxxh
9..10	Result, actuator 4	Xxxxh

Remark: Result is a signal which informs about the former actuation of the corresponding actuator.

3.12.11.5 RoutineLocalIdentifier = Dynamic Test

ECU → TESTER: [SERVICE] - Positive Response		
Byte	**Contents**	**Value**
0	Service Positive Response Identifier	71h
1	RoutineLocalIdentifier	05h
2	ControlStatus	Xxh
3..4	Result, delta wheel speed front left (1LSB = (1/64)m/s)	Xxxxh
5..6	Result, delta wheel speed front right (1LSB = (1/64)m/s)	Xxxxh
7..8	Result, delta wheel speed rear left (1LSB = (1/64)m/s)	Xxxxh
9..10	Result, delta wheel speed rear right (1LSB = (1/64)m/s)	Xxxxh

Remark: Result is a signed word information with a resolution of 1 LSB = 1/64 m/s = 0,05625 km/h and a range of -100 m/s … x … 100 m/s or -360 km/h … x … 360 km/h

3.12.11.6 RoutineLocalIdentifier = Test of the wheel speed sensors

ECU → TESTER: [SERVICE] - Positive Response		
Byte	**Contents**	**Value**
0	Service Positive Response Identifier	71h
1	RoutineLocalIdentifier	06h
2	RoutineStatus	xxh
3..4	Maximum speed of the front left wheel (1LSB = 0,01km/h)	xxxxh
5..6	Minimum speed of the front left wheel (1LSB = 0,01km/h)	xxxxh
7..8	Maximum speed of the front right wheel (1LSB = 0,01km/h)	xxxxh
9..10	Minimum speed of the front right wheel (1LSB = 0,01km/h)	xxxxh
11..12	Maximum speed of the rear left wheel (1LSB = 0,01km/h)	xxxxh
13..14	Minimum speed of the rear left wheel (1LSB = 0,01km/h)	xxxxh
15..16	Maximum speed of the rear right wheel (1LSB = 0,01km/h)	xxxxh
17..18	Minimum speed of the rear right wheel (1LSB = 0,01km/h)	xxxxh

Remark: Bytes 3..18 are only sent if the response is “RoutineStatus = Routine completed”.

Remark: The test should be done during at least one complete wheel rotation.
Remark: If the test fails the minimum and maximum speed of a wheel speed sensor are set to 7FFFh.

© All rights reserved by ROBERT BOSCH GmbH, even in the event of patent claims.
This document must not be used in any way, such as copying and making available to third parties, without our consent.

3.12.12 Negative Response

ECU → TESTER: [SERVICE] - Negative Response		
Byte	**Contents**	**Value**
0	Negative Response Identifier	7Fh
1	RequestServiceIdentifier	31h
2	**ResponseCode** SubFunctionNotSupported/InvalidFormat ConditionsNotCorrect/RequestSeqError	 12h 22h

Remarks

- At the end of each command, the elements which were tested have to be replaced in their OFF states.

© All rights reserved by ROBERT BOSCH GmbH, even in the event of patent claims.
This document must not be used in any way, such as copying and making available to third parties, without our consent.

3.13 WriteDataByLocalIdentifier

3.13.1 Purpose

The service WriteDataByLocalIdentifier is used to write information into the ECU. The parameter RecordLocalIdentifier is used to select which information has to be written.

PARAMETER: RecordLocalIdentifier		
Size (Byte)	**Description**	**Value**
1	Filling-in status of the hydraulic block	02h
1	Status of Test of end-of-line	03h

3.13.2 Request

3.13.2.1 RecordLocalIdentifier = Filling-in status of the hydraulic block

This request is used to write a byte which indicates the filling-in status of the hydraulic block.

TESTER → ECU: [SERVICE] – Request		
Byte	**Contents**	**Value**
0	Service Identifier	3Bh
1	RecordLocalIdentifier	02h
2	Filling-in status	xxh

Remark: Bosch delivery state is FFh.

3.13.2.2 RecordLocalIdentifier = Status of Test of End-Of-Line

This request is used to write a byte which indicates the status if the end-of-line test.

TESTER → ECU: [SERVICE] – Request		
Byte	**Contents**	**Value**
0	Service Identifier	3Bh
1	RecordLocalIdentifier	03h
2	End-of-line test status	xxh

Remark: Bosch delivery state is FFh.

3.13.3 Positive Response

ECU → TESTER: [SERVICE] - Positive Response		
Byte	**Contents**	**Value**
0	Service Positive Response Identifier	7Bh
1	RecordLocalIdentifier	xxh

© All rights reserved by ROBERT BOSCH GmbH, even in the event of patent claims.
This document must not be used in any way, such as copying and making available to third parties, without our consent.

3.13.4 Negative Response

ECU → TESTER: [SERVICE] - Negative Response		
Byte	**Contents**	**Value**
0	Negative Response Identifier	7Fh
1	Request Service Identifier	3Bh
2	**Response Code** Sub Function Not Supported / Invalid Format Conditions Not Correct / Request SequenceError Response Pending Security Access Denied	 12h 22h 78h 33h

© All rights reserved by ROBERT BOSCH GmbH, even in the event of patent claims.
This document must not be used in any way, such as copying and making available to third parties, without our consent.

3.14 TesterPresent

3.14.1 Purpose

The service TesterPresent is used to indicate the ECU that a tester is connected and diagnostic services and/or communication have to remain active. Sending the request keeps the ECU in a diagnostic session other than the StandardDiagMode.

PARAMETER: ResponseRequired		
Size (Byte)	**Description**	**Value**
1	ResponseRequired	01h
1	NoResponseRequired	00h

3.14.2 Request

TESTER → ECU: [SERVICE] – Request		
Byte	**Contents**	**Value**
0	Service Identifier	3Eh
1	ResponseRequired	01h

TESTER → ECU: [SERVICE] – Request		
Byte	**Contents**	**Value**
0	Service Identifier	3Eh
1	NoResponseRequired	00h

3.14.3 Positive Response

ECU → TESTER: [SERVICE] - Positive Response		
Byte	**Contents**	**Value**
0	Service Positive Response Identifier	7Eh
1	ResponseRequired	01h

3.14.4 Negative Response

ECU → TESTER: [SERVICE] - Negative Response		
Byte	**Contents**	**Value**
0	Negative Response Identifier	7Fh
1	Request Service Identifier	3Eh
2	SubFunctionNotSupported/InvalidFormat	12h

© All rights reserved by ROBERT BOSCH GmbH, even in the event of patent claims.
This document must not be used in any way, such as copying and making available to third parties, without our consent.

4 List of DTCs

4.1 DTC List

DTC	DTC (Hex)	DTC Description	Notice
C190004	**0x590004**	ECU Voltage supply: high voltage	
C190104	**0x590104**	ECU Voltage supply: low voltage	
C100004	**0x500004**	ECU error (hardware, Micro-controller error)	
C101008	**0x501008**	ECU error (general software problem)	
C006B06	**0x406B06**	ABS/ESP implausible control (control time too long, etc.)	
C003108	**0x403108**	Wheel-speed sensor, front left: (signal failure) out of range, lost, noise, Intermittent	
C003200	**0x403200**	Wheel-speed sensor, front left: Signal Line short to GND/Open, Supply Line open	
C00A000	**0x40A000**	Wheel-speed sensor, front left: short to GND	
C00A100	**0x40A100**	Wheel-speed sensor, front left: short to UBATT	
C00A900	**0x40A900**	Wheel-speed sensor, front left: general error	undef (no exact failure reason detectable)
C003408	**0x403408**	Wheel-speed sensor, front right: (signal failure) out of range, lost, noise, Intermittent	
C003500	**0x403500**	Wheel-speed sensor, front right: Signal Line short to GND/Open, Supply Line open	
C00A200	**0x40A200**	Wheel-speed sensor, front right: short to GND	
C00A300	**0x40A300**	Wheel-speed sensor, front right: short to UBATT	
C00AA00	**0x40AA00**	Wheel-speed sensor, front right: general error	undef (no exact failure reason detectable)
C003708	**0x403708**	Wheel-speed sensor, rear left: (signal failure)out of range, lost, noise, Intermittent	
C003800	**0x403800**	Wheel-speed sensor, rear left: Signal Line short to GND/Open, Supply Line open	
C00A400	**0x40A400**	Wheel-speed sensor, rear left: short to GND	

© All rights reserved by ROBERT BOSCH GmbH, even in the event of patent claims.
This document must not be used in any way, such as copying and making available to third parties, without our consent.

DTC	DTC (Hex)	DTC Description	Notice
C00A500	**0x40A500**	Wheel-speed sensor, rear left: short to UBATT	
C00AB00	**0x40AB00**	Wheel-speed sensor, rear left: general error	undef (no exact failure reason detectable)
C003A08	**0x403A08**	Wheel-speed sensor, rear right: (signal failure) out of range, lost, noise, Intermittent	
C003B00	**0x403B00**	Wheel-speed sensor, rear right: Signal Line short to GND/Open, Supply Line open	
C00A600	**0x40A600**	Wheel-speed sensor, rear right: short to GND	
C00A700	**0x40A700**	Wheel-speed sensor, rear right: short to UBATT	
C00AC00	**0x40AC00**	Wheel-speed sensor, rear right: general error	undef (no exact failure reason detectable)
C109904	**0x509904**	Wheel-speed sensor generic error (sensor swap, multiple sensors error)	
C001004	**0x401004**	valve fault, inlet valve FL	
C001104	**0x401104**	valve fault, outlet valve FL	
C001404	**0x401404**	valve fault, inlet valve FR	
C001504	**0x401504**	valve fault, outlet valve FR	
C001804	**0x401804**	valve fault, inlet valve RL	
C001904	**0x401904**	valve fault, outlet valve RL	
C001C04	**0x401C04**	valve fault, inlet valve RR	
C001D04	**0x401D04**	valve fault, outlet valve RR	
C109504	**0x509504**	Valve relay error	
C002004	**0x402004**	Return pump fault	
C007208	**0x407208**	General Valve fault (overheat protection, signal invalid, hardware fault)	

© All rights reserved by ROBERT BOSCH GmbH, even in the event of patent claims.
This document must not be used in any way, such as copying and making available to third parties, without our consent.

5 Diagnostic Flow Chart

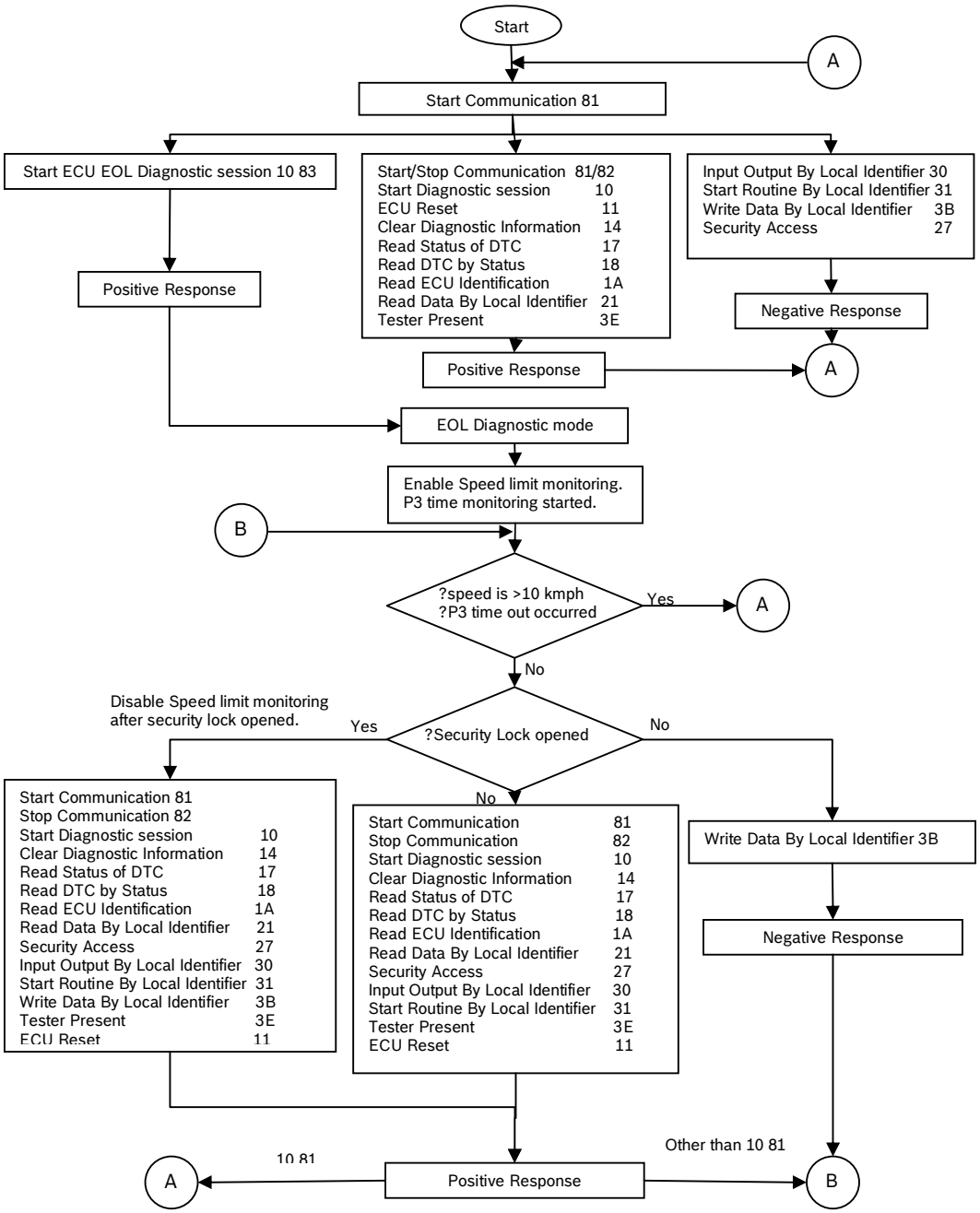

© All rights reserved by ROBERT BOSCH GmbH, even in the event of patent claims.
This document must not be used in any way, such as copying and making available to third parties, without our consent.

6 Appendix – A: Actuator Table

Value	Description	Resolution/Comment
0000h	No actuation*	0x0000
0022h	Single control - Motor (Pump)	0xFFFF – ON 0x0000 - OFF
0030h	Single control - Front left valve (inlet)	0xFFFF – ON 0x0000 – OFF
0032h	Single control - Front left valve (outlet)	0xFFFF – ON 0x0000 – OFF
0034h	Single control - Front right valve (inlet)	0xFFFF – ON 0x0000 – OFF
0036h	Single control - Front right valve (outlet)	0xFFFF – ON 0x0000 – OFF
0038h	Single control - Rear right valve (inlet)	0xFFFF – ON 0x0000 – OFF
003Ah	Single control - Rear right valve (outlet)	0xFFFF – ON 0x0000 - OFF
003Ch	Single control - Rear left valve (inlet)	0xFFFF – ON 0x0000 – OFF
003Eh	Single control - Rear left valve (outlet)	0xFFFF – ON 0x0000 – OFF

Remark: * Use if less than four actuators are to be actuated by an actuator test or dynamic test request.

© All rights reserved by ROBERT BOSCH GmbH, even in the event of patent claims.
This document must not be used in any way, such as copying and making available to third parties, without our consent.